HRSS6C Handrail

Data Sheet:
December 2008

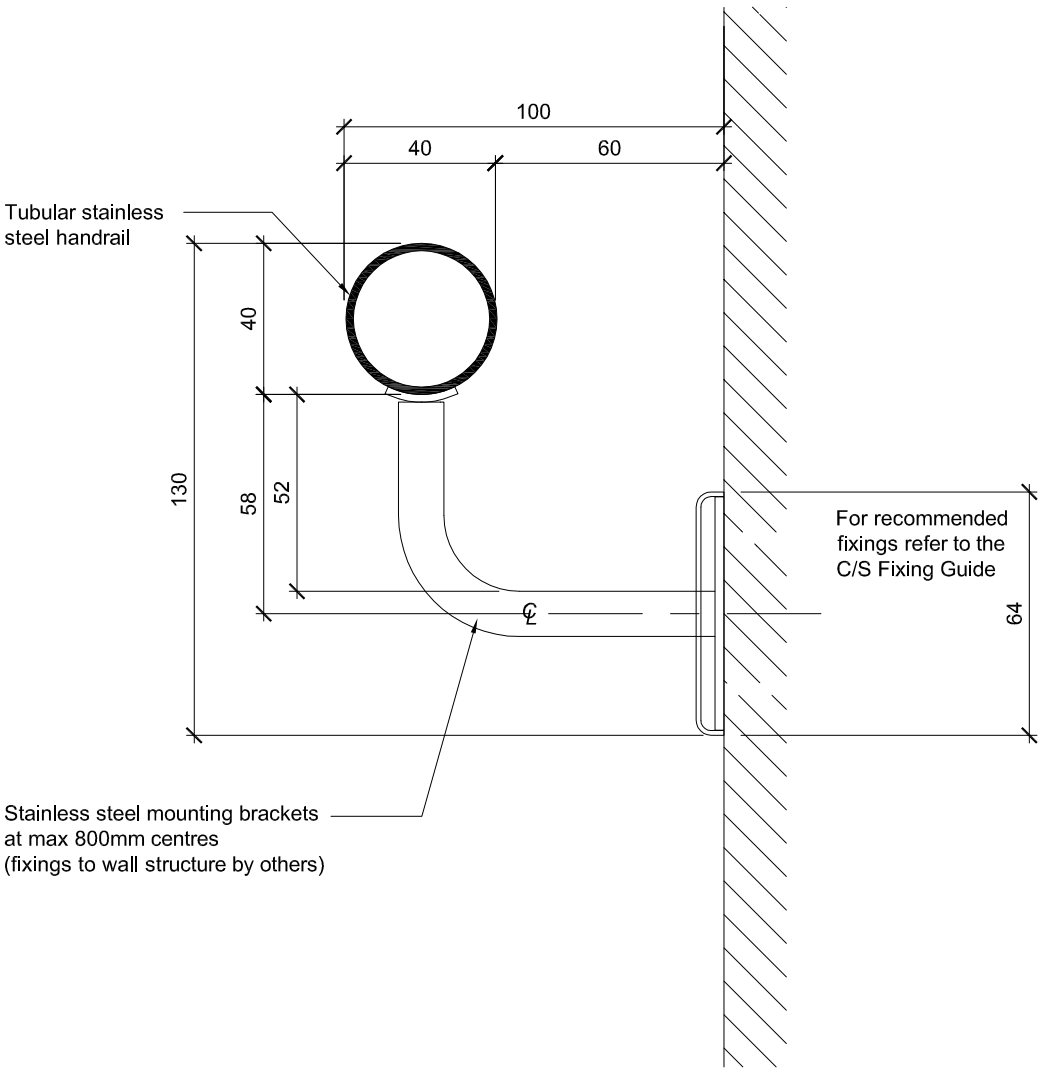

LIGHT DUTY

C/S Acrovyn®

Wall, Door and Corner Protection

Not to scale

All dimensions in millimetres unless otherwise stated.
Do not scale from the drawing. If in doubt ask

Construction Specialties™

Construction Specialties (UK) Ltd
1010 Westcott Venture Park
Westcott, Aylesbury
Buckinghamshire HP18 0XB
England

Tel: +44 (0)1296 652800
Fax: +44 (0)1296 652888

e-mail: info@c-sgroup.co.uk
Internet: www.c-sgroup.co.uk

This drawing/specification is the property of Construction Specialties (UK) Ltd and may not be reproduced in full or part or disclosed to any third party in any form without the written permission of Construction Specialties (UK) Ltd. © Copyright 2008 Construction Specialties (UK) Ltd.